Implementation of the EDGES *Antenna Simulator*

Raul Monsalve
SESE, Arizona State University

July 26, 2012

Abstract

The *antenna simulator* circuit proposed by A. Rogers was implemented. Its purpose is to bias an incandescent lamp for it to act as a resistor at temperatures $\sim$ 1800 K. It is connected to the rest of the EDGES system in place of the four-point antenna.

1 Implementation

The circuit schematic is described in Memo 82 [2] and shown in figure 1. It was built using the balun described in Memo 43 [1] available in the lab and depicted in figure 2. The other components of the circuit are:

- 4 capacitors of 0.02 μF, 50 V.
- 3 inductors of 1 μH, SRF of 200 MHz.
- 1 inductor of 0.1 μH, SRF of 250 MHz.
- 1 resistor of 280 Ω, $\pm$ 0.1%.
- 1 tungsten-filament incandescent lamp, JKL 1829, 28 V, Mouser part# 560-1829.

Figure 3 shows the assembled circuit during tests. The connector on the right corresponds to the 28 VDC input. The connector on the left is the unbalanced output monitored by the VNA.

The resistance of the lamp when OFF is 35 Ω. When the circuit is powered on, the DC current drawn is 0.048 A and the voltage drop across the lamp is 14.26 VDC, which means that the lamp resistance is 297 Ω under these conditions. When the lamp is connected directly to 28 VDC it draws a current of 0.072 A, implying a resistance of 389 Ω.

The full circuit was simulated as detailed in section 2 and the comparison with the VNA measurements is presented in section 3.

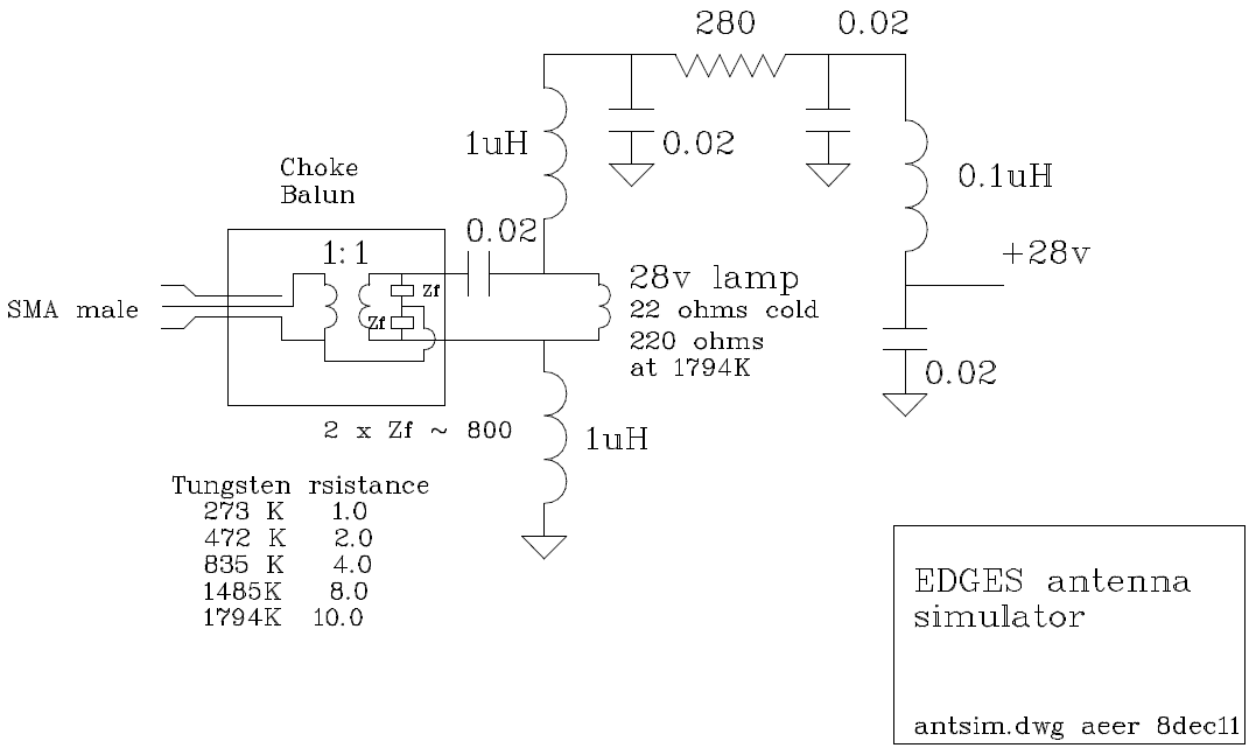

Figure 1: Schematic of the *antenna simulator* circuit proposed in Memo 82 [2].

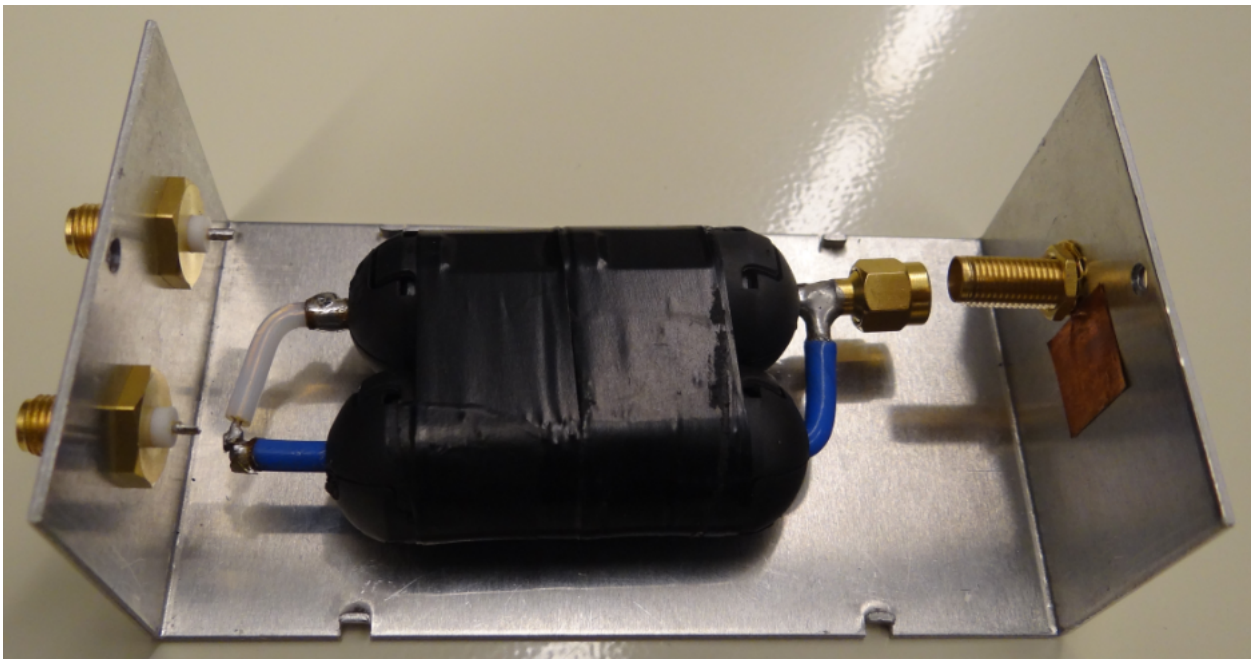

Figure 2: Choke balun with balance compensation described in Memo 43 [1] and used for the *antenna simulator* testing.

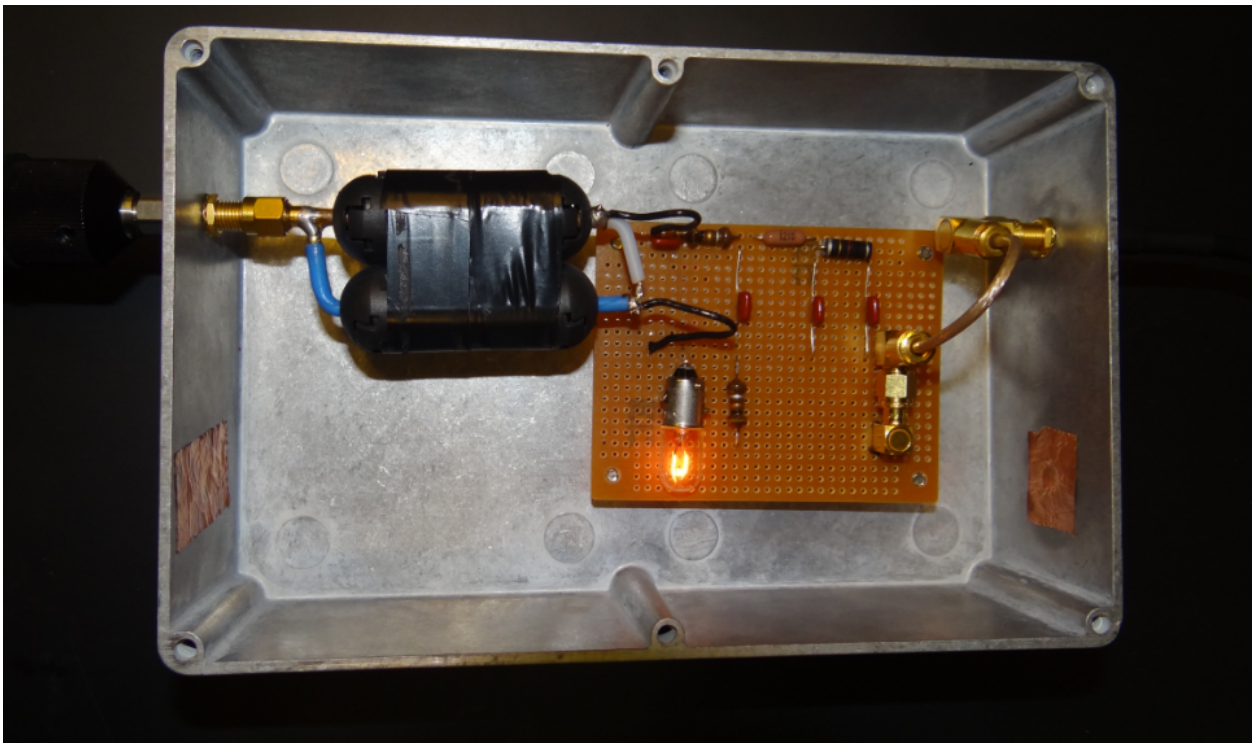

Figure 3: Implementstion of the *antenna simulator*. DC input is on the right and VNA output on the left.

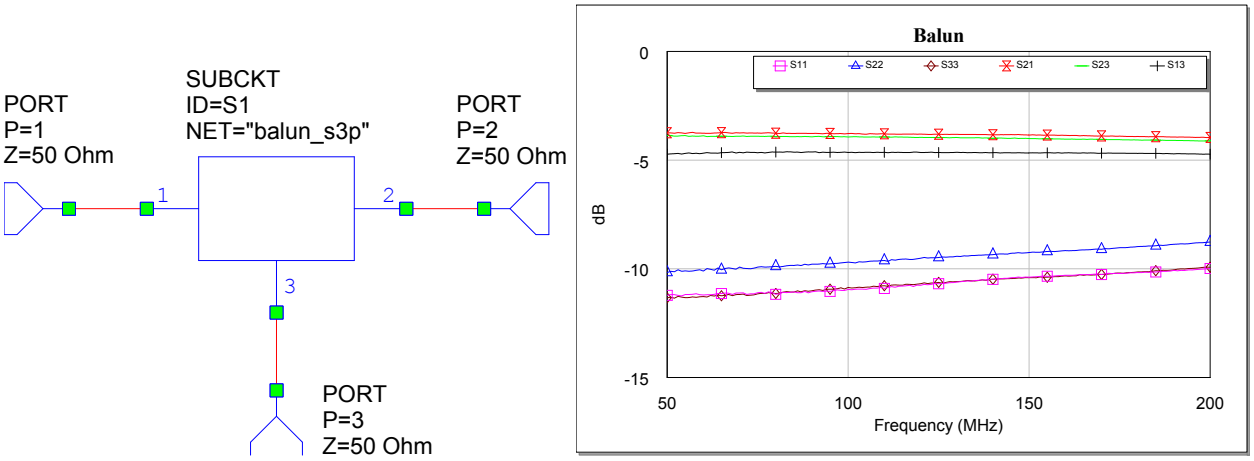

Figure 4: *Left*: Balun block created in Microwave Office using the S-parameters of the balun. Ports 1 and 3 correspond to the balanced inputs and port 2 is the unbalanced output. *Right*: S-parameters of the balun when terminated in 50 Ω loads.

2 Software Simulations

The circuit was simulated using Microwave Office. Since the software does not have a model for the balun, a block was created for this device using its S-parameters measured with the VNA in a 3-port configuration. Figure 4 shows the balun block and its S-parameters when terminated with 50 Ω loads.

Figure 5 shows S22 (voltage reflection coefficient for the unbalanced output) when a 50 Ω load is connected across the balanced inputs, and compared to the case with two 50 Ω terminations. Clearly, a 50 Ω load across the balanced inputs produces a much better adaptation.

Figure 6 shows the full simulated circuit, whose results are presented in the next section.

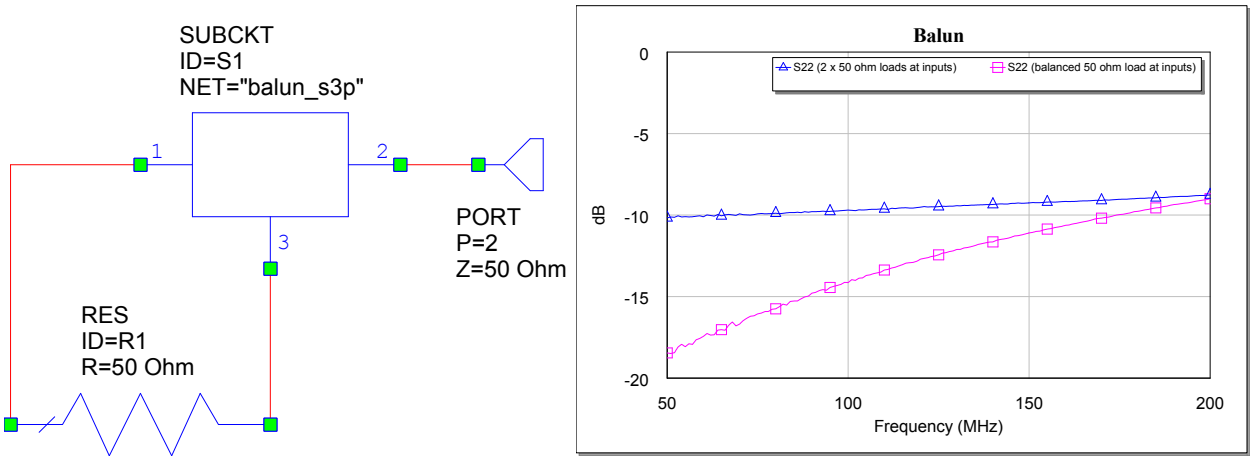

Figure 5: *Left*: 50 Ω resistor connected to the balanced inputs of the balun. *Right*: Improvement in S22 when a 50 Ω resistor is connected to the balanced inputs (magenta), compared to terminating each input with 50 Ω loads as in figure 4 (blue).

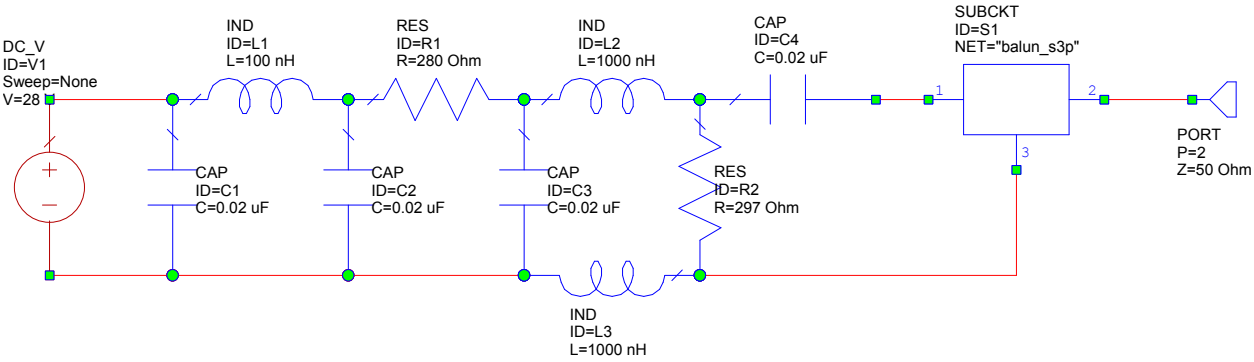

Figure 6: Schematic of the *antenna simulator* circuit during the simulations with Microwave Office. The lamp is modeled as a resistor of 297 Ω.

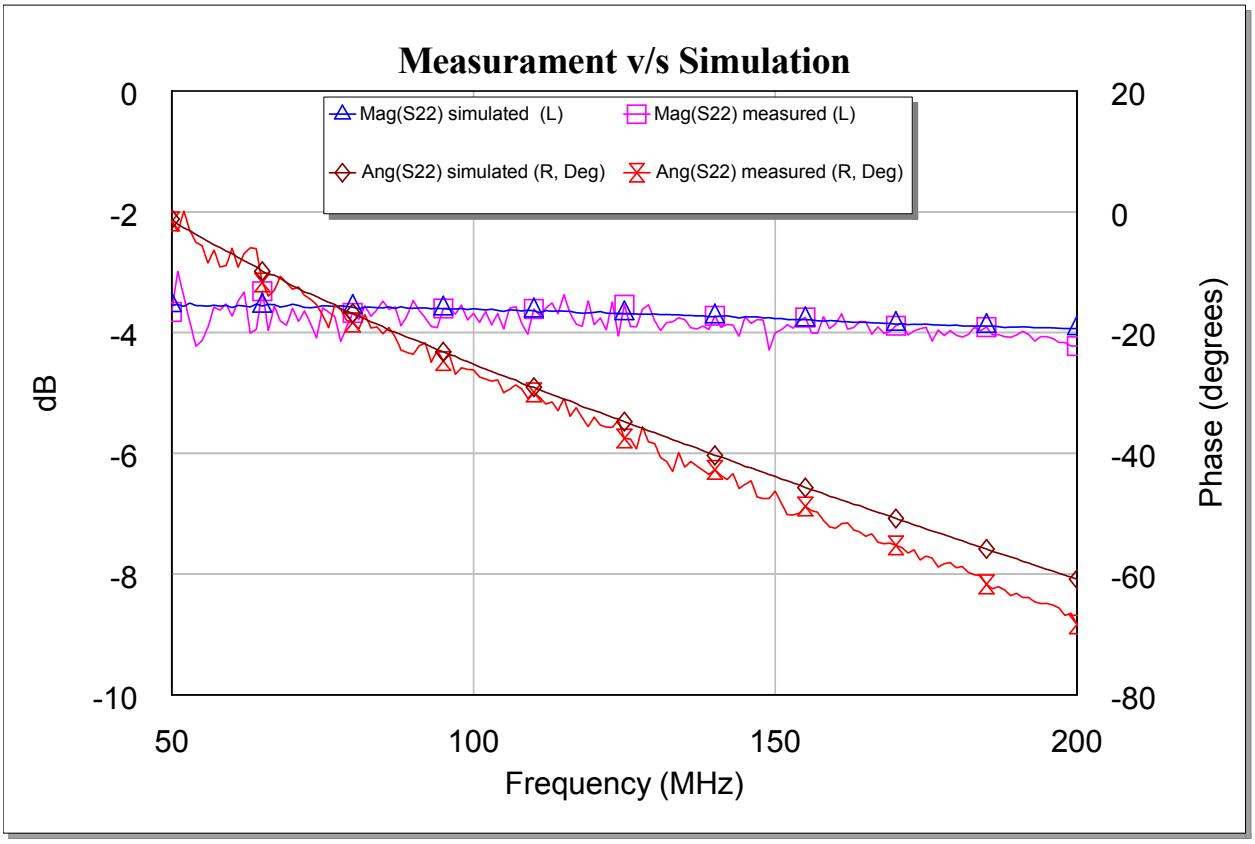

Figure 7: Simulations and measurements of the unbalanced output of the *antenna simulator*, labeled as port 2 in figure 6. There is very good agreement between them in magnitude and phase.

3 Results

Figure 7 shows the comparison between the simulation and measurements of the unbalanced output of the *antenna simulator*. There is a very good agreement between them, and the differences are most likely due to the frequency dependence of the lamp biasing circuit, inductors in particular. This also confirms that assigning a resistance of 297 Ω to the lamp is adequate.

References

[1] A. Rogers. Edges memo 043. `http://www.haystack.mit.edu/ast/arrays/Edges/EDGES_memos/043.pdf`.

[2] A. Rogers. Edges memo 082. `http://www.haystack.mit.edu/ast/arrays/Edges/EDGES_memos/082.pdf`.