Antenna Calibration

for BicoLOG 5070 Biconical Antenna

Prepared by Jose Chavez

2013 Apr 07

LoCo Research Group

Tentative Setup

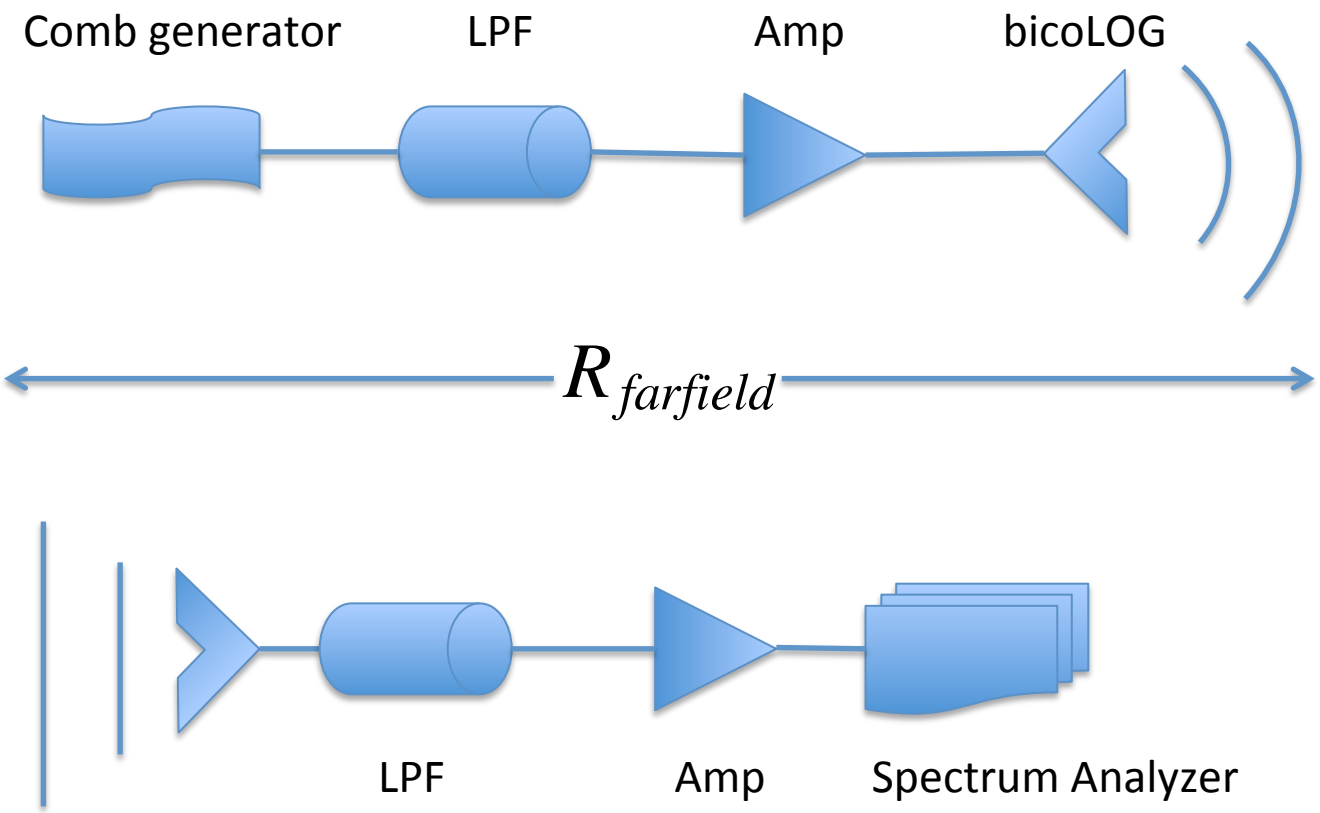

Farfield radial distance

$$R_{ff} = \frac{2D^2}{\lambda}$$

$$R_{ff} = 2\lambda$$

- *D:* maximum dimension of transmitting antenna
- *λ:* operating wavelength of transmitting antenna
- (top) general equation
- (bottom) equation for electrically small antennas, like short dipole and small loops.

R_{ff} for bicoLOG antenna

$$R_{ff}=2\lambda=2\cdot\left(\frac{c}{f_{\min}}\right)=2\cdot\frac{\left(3.10^{8}\ m\right)}{\left(50\ MHz\right)}=2\cdot(6m)=12m$$

*Distance is too large for the lab.
*Might be able to use larger frequency (80 MHz), smaller wavelength.
*Lab setup was 25”(7.62m)

Radio Link (Friis)

$$P_r = \left(\frac{\lambda}{4\pi R}\right)^2 G_t \, G_r \, P_t$$

- P_t: radiated power by transmitting antenna
- P_r: received power by antenna
- G_t: gain of transmitting antenna
- G_r: gain of receiving antenna
- λ: transmitting antenna operating wavelength
- R: radial distance from transmitting antenna

Gain Diagram BicoLOG 5070

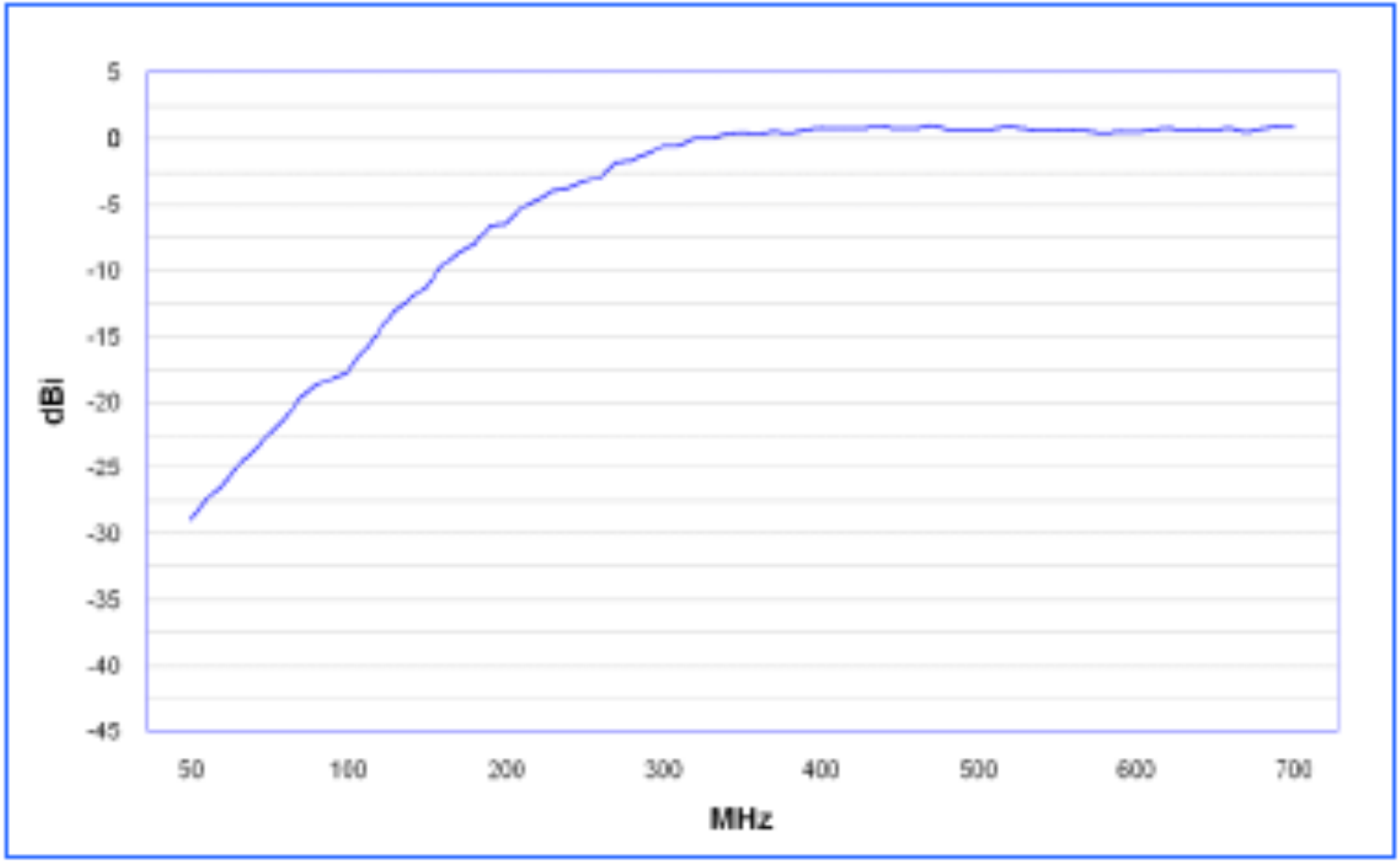

R&S®HK033

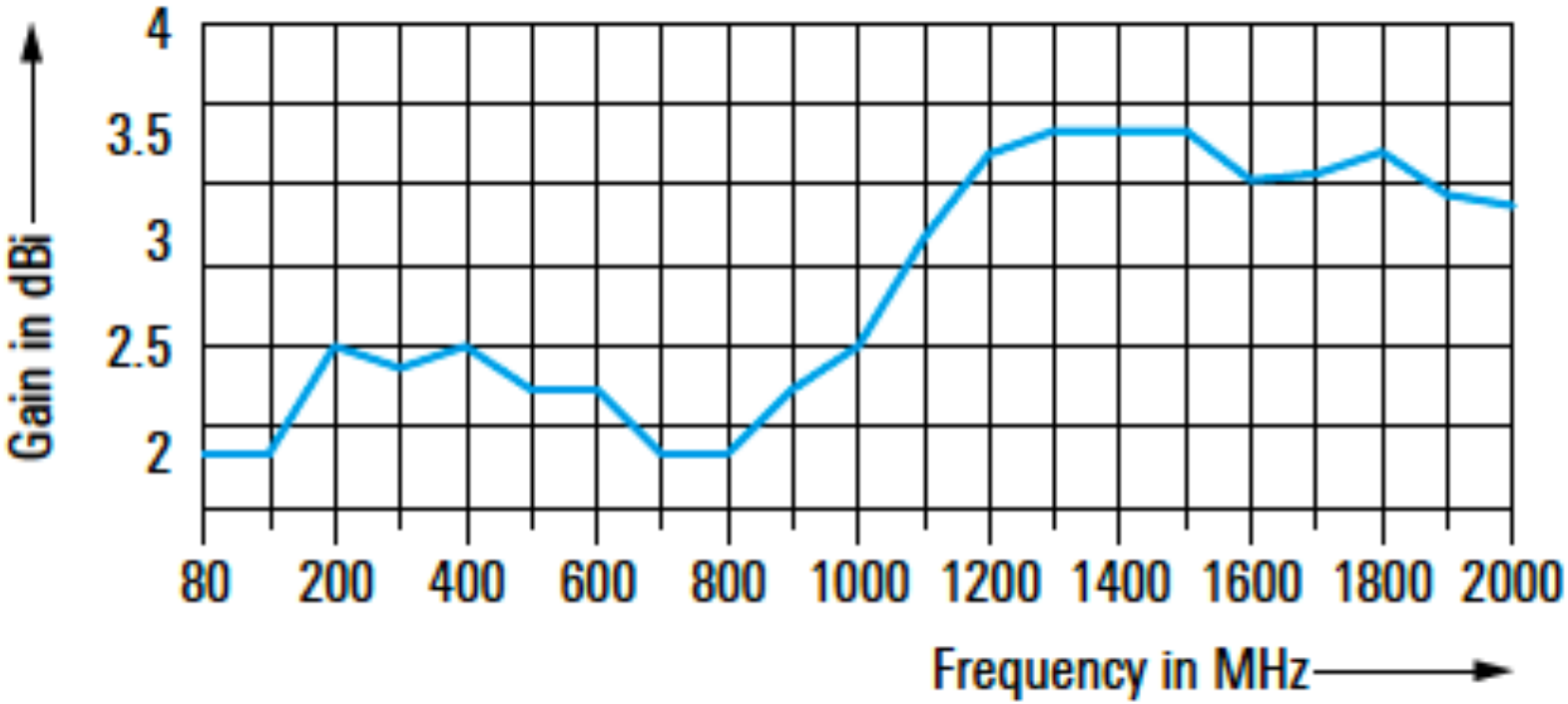
Gain in dBi
4
3.5
3
2.5
2
80
200
400
600
800
1000
1200
1400
1600
1800
2000
Frequency in MHz

If we want receiving antenna to get a -30dBm signal, solve for P_t and set P_r to be 0.001 mW. (Used linear gain, 80MHz)

$$P_t = \frac{(4\pi R)^2}{G_t G_r \lambda} P_r$$

$$P_t = \frac{(4\pi\,(12\,m))^2}{(0.0076).(1.5849).(3.75\,m)}(0.001mW) = 133.6\ mW = 21.26\ dBm$$

We need approximately a 50 db amplification.

Setup

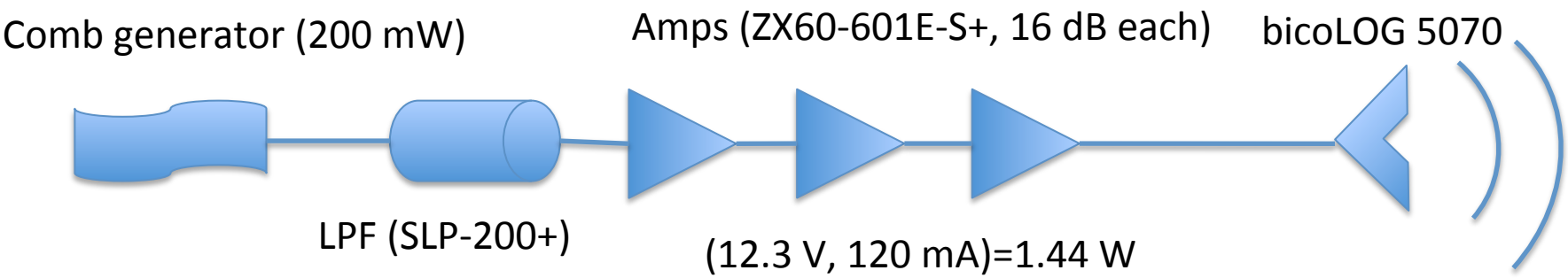
Comb generator (200 mW)
Amps (ZX60-601E-S+, 16 dB each)
bicoLOG 5070
LPF (SLP-200+)
(12.3 V, 120 mA)=1.44 W

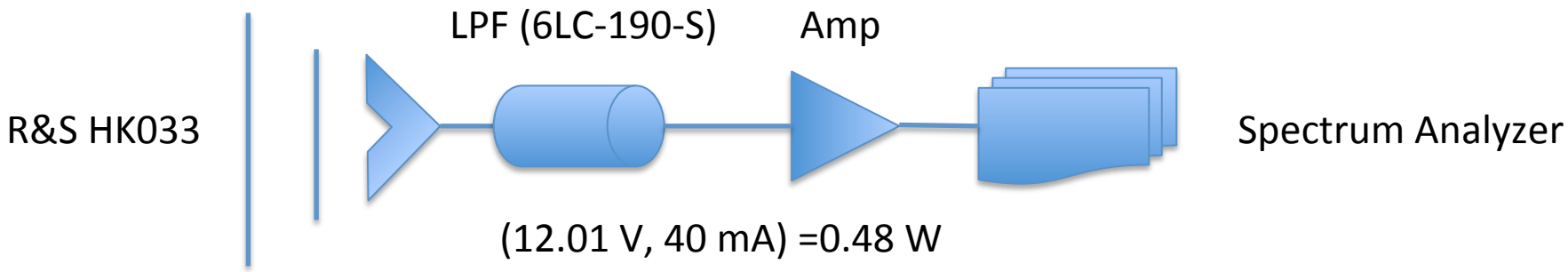
LPF (6LC-190-S)
Amp
R&S HK033
Spectrum Analyzer
(12.01 V, 40 mA) =0.48 W

Setup (Transmitting)

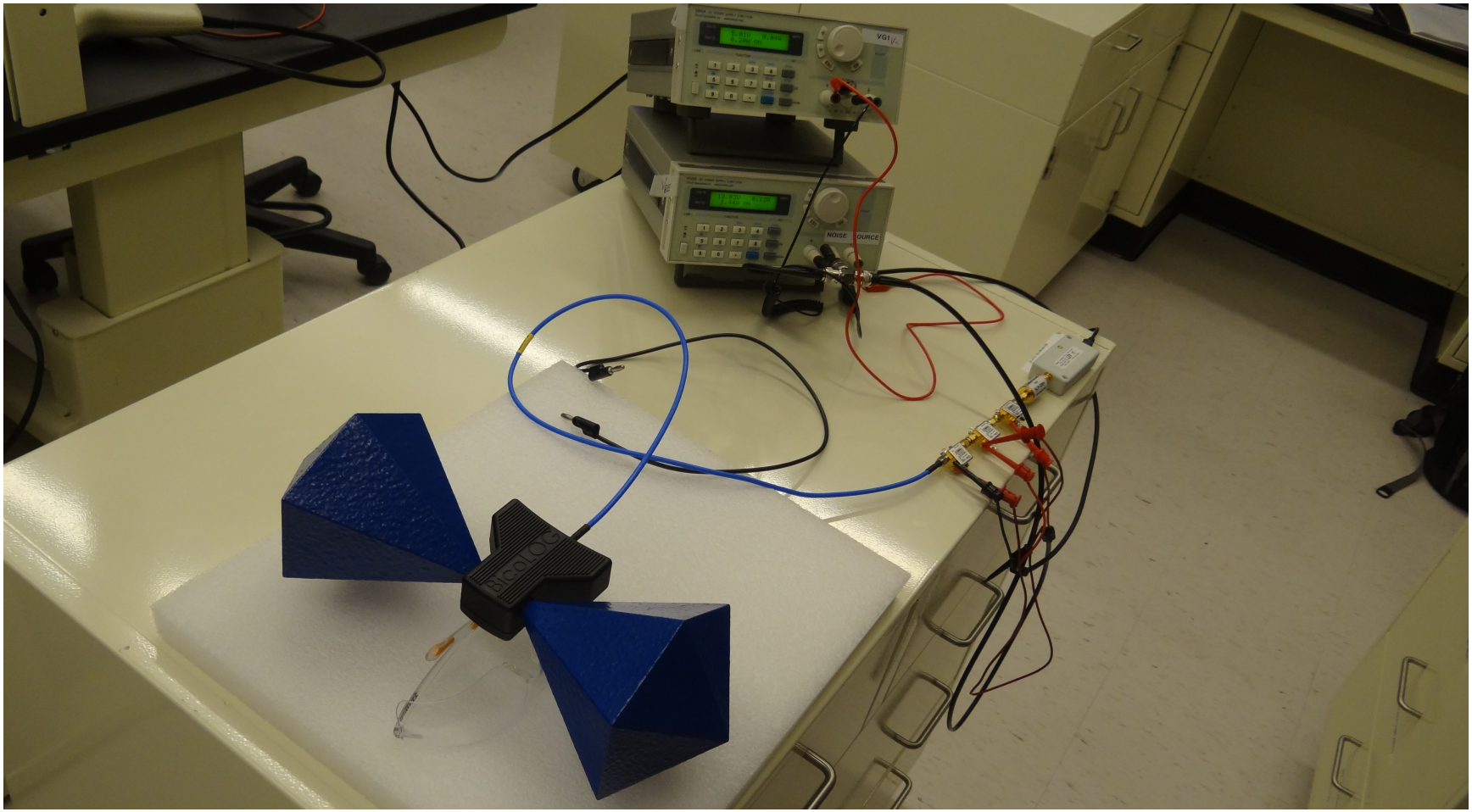

Setup (Receiving)

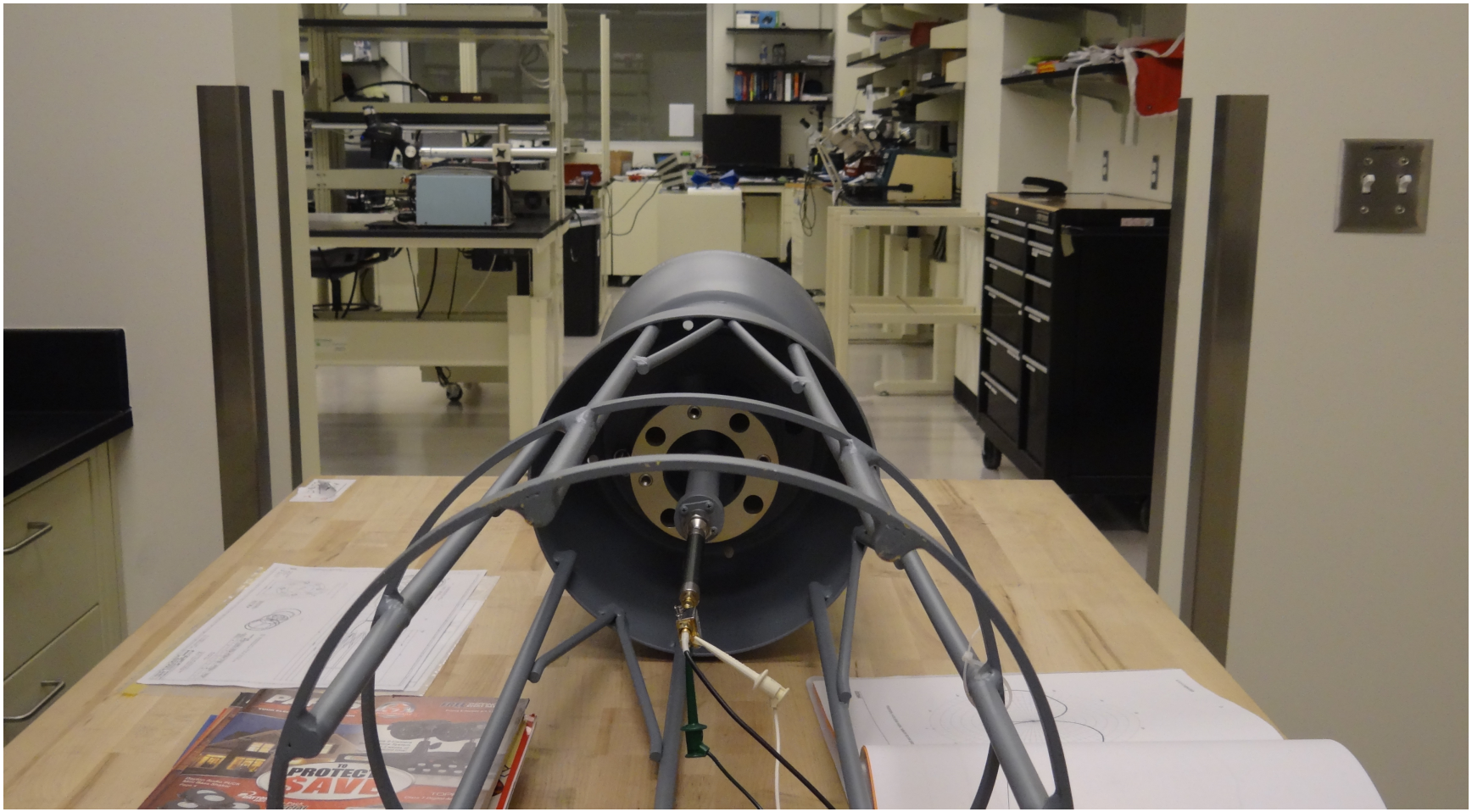

Sweeps

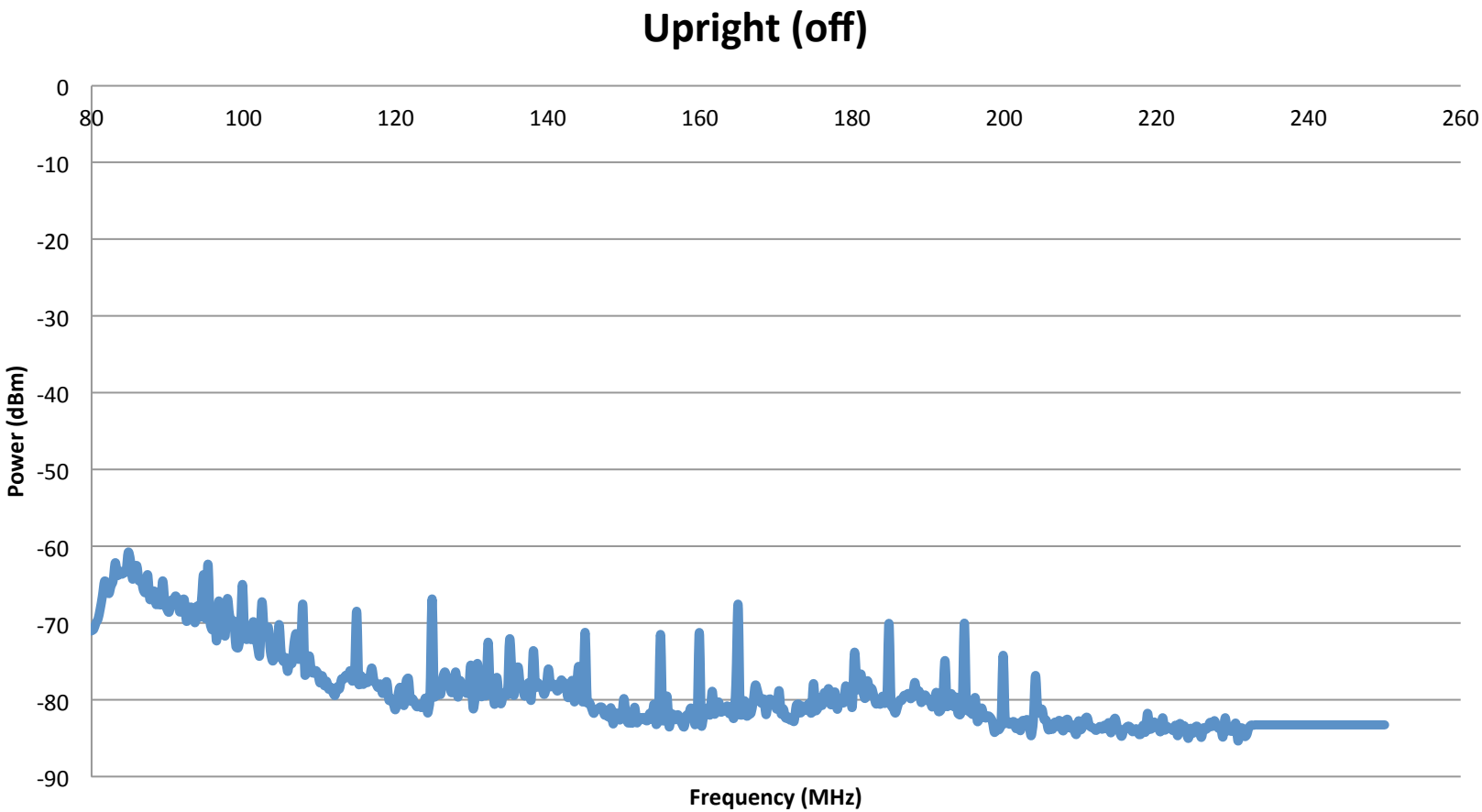
Upright (off)
0
-10
-20
-30
-40
-50
-60
-70
-80
-90
80
100
120
140
160
180
200
220
240
260
Power (dBm)
Frequency (MHz)

Sweeps

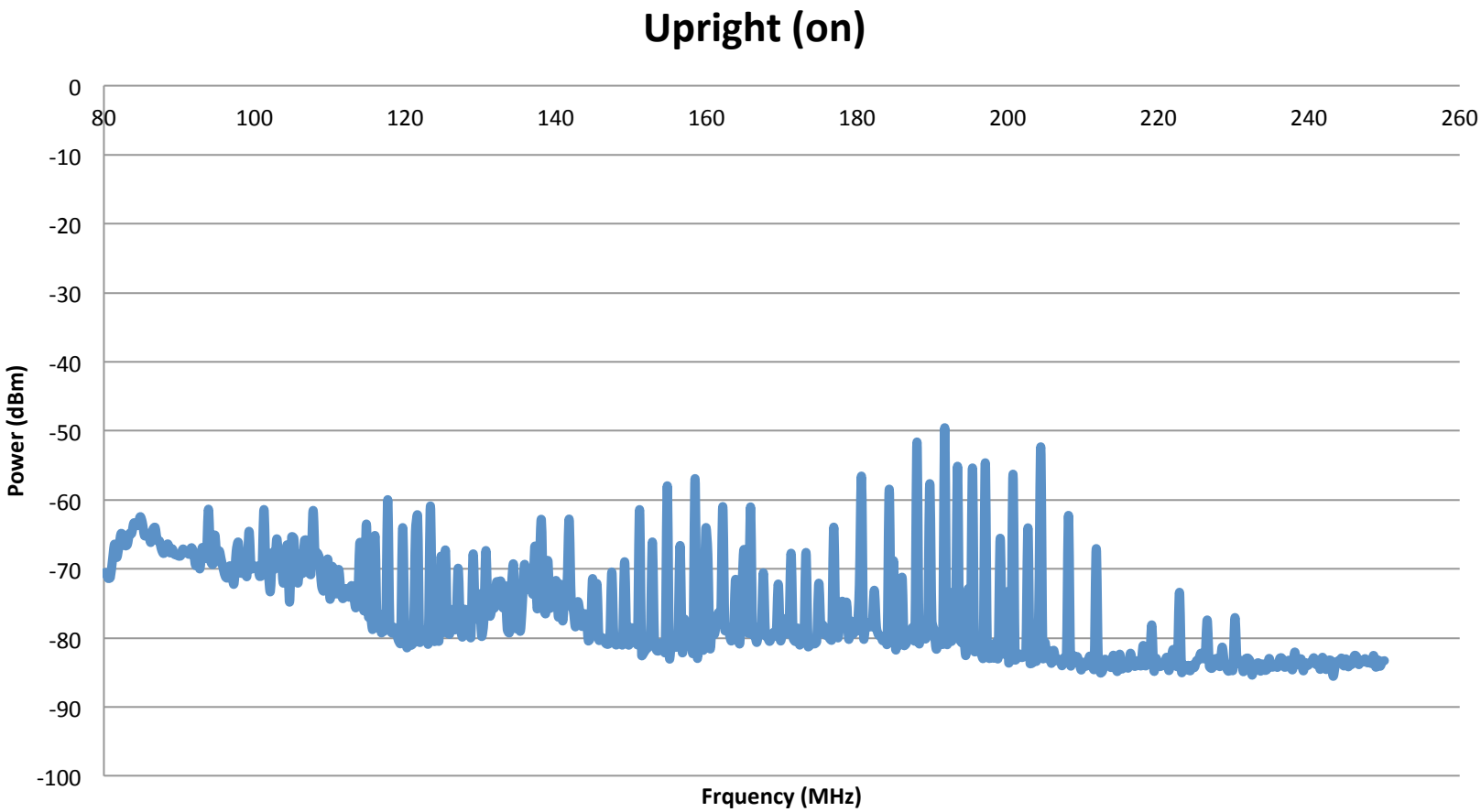
Upright (on)
0
-10
-20
-30
-40
-50
-60
-70
-80
-90
-100
80
100
120
140
160
180
200
220
240
260
Power (dBm)
Frquency (MHz)